SANSPAR

CAPE TOWN
Tel: 021-5110283 - Email: info@sanspar.co.za
JOHANNESBURG
Tel: 011-3976889 - Email: jhb@sanspar.co.za
DURBAN
Tel: 031-7002485 - Email: kzn@sanspar.co.za

UNI-FLO TYPE KB DIAPHRAGM VALVE

STRAIGHT THROUGH DIAPHRAGM VALVE

Screwed Range:	DN25, DN40 and DN50
Flanged Range:	DN25 - DN250
Pressure Rating:	DN25 - DN100: 10bar DN150: 6bar DN200 - DN250: 3.5bar
Temperature Rating:	-10°C - 85°C
Body Material:	Ductile Iron
Bonnet Material:	Ductile Iron
Compressor Material:	Ductile Iron
Body Lining Material:	Natural Rubber
Diaphragm Material:	Reinforced Natural Rubber
Spindle Material:	Mild Steel
Spindle Nut Material:	Brass
Flange drilling:	BS10 Table D, BS4504 Table 10
Screwed body thread:	ISO R7 (BSP Thread)

DESCRIPTION

Uni-Flow Type KB diaphragm valves are designed to suit the harsh conditions in the South African mining industry. This time proven design features a straight through bore, with minimal turbulence to handle abrasive slurries with 100% leak tight closure. This improved design is cast in ductile iron (not grey cast iron) to prevent premature failure from abuse during handling and water hammer that is prevalent in many mining applications. The body of the valve is rubber injection moulded to ensure consistent quality. The injection moulded lining is free of pinholes with a consistent thickness throughout the body that cannot be achieved with conventional hand lining. The flanges are fully lined to prevent damage to the flanges from over torqueing the valve during installation.

FEATURES

- Straight through body design for low pressure drop
- Bi-directional sealing
- Valve can be installed in any position
- Flexible closure even with solids present in the valve bore
- Non-rising spindle
- Self-cleaning trapezoidal thread on the spindle
- Fully lined flanges to prevent damage from over torqueing
- Rubber injection moulded body lining
- Ductile iron body (not grey cast iron)
- Working parts isolated from abrasive media

SANSPAR

CAPE TOWN
Tel: 021-5110283 - Email: info@sanspar.co.za
JOHANNESBURG
Tel: 011-3976889 - Email: jhb@sanspar.co.za
DURBAN
Tel: 031-7002485 - Email: kzn@sanspar.co.za

UNI-FLO TYPE KB DIAPHRAGM VALVE

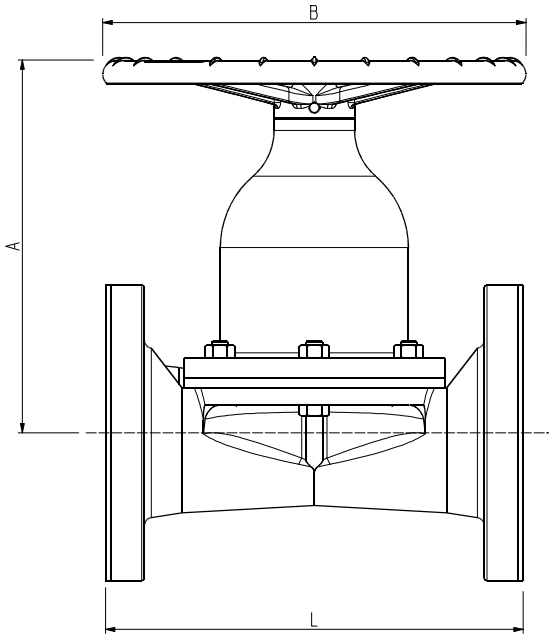

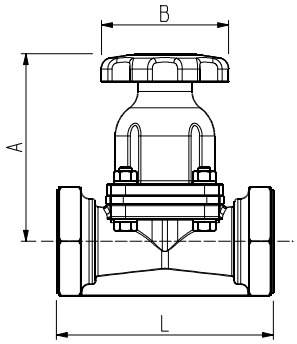

DIMENSIONS

SCREWED UNLINED BODIES

SIZE	A	B	L	WEIGHT (KG)
25	164	85	111	2.2
40	164	85	143	3.7
50	189	160	168	5.9

FLANGED LINED BODIES

SIZE	A	B	L	WEIGHT (KG)
25	160	85	133	4.2
40	182	85	165	5.7
50	230	160	196	11
80	303	250	250	23
100	324	315	311	28
150	470	615	412	65
200	640	400	527	110
250	745	500	641	185

MATERIALS LIST
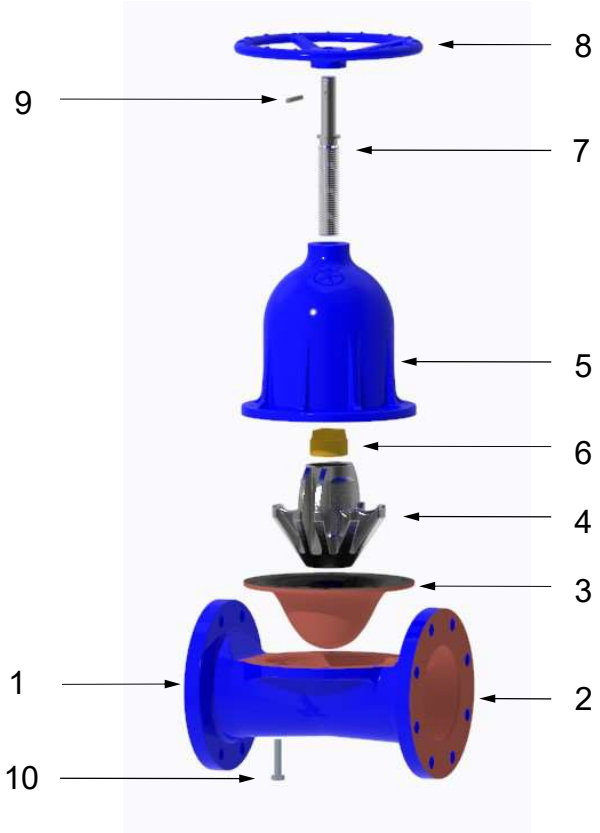
	PART	MATERIAL
1	Body	Ductile Iron
2	Body Lining	Natural rubber
3	Diaphragm	Natural rubber
4	Compressor	Ductile Iron
5	Bonnet	Ductile Iron
6	Spindle Nut	Brass
7	Spindle	Mild Steel
8	Hand wheel	Ductile Iron
9	Pin	Carbon Steel
10	Bolt	Stainless Steel